FAIRLAND®

R32 Full-inverter Dehumidifier
INSTALLATION AND USER MANUAL

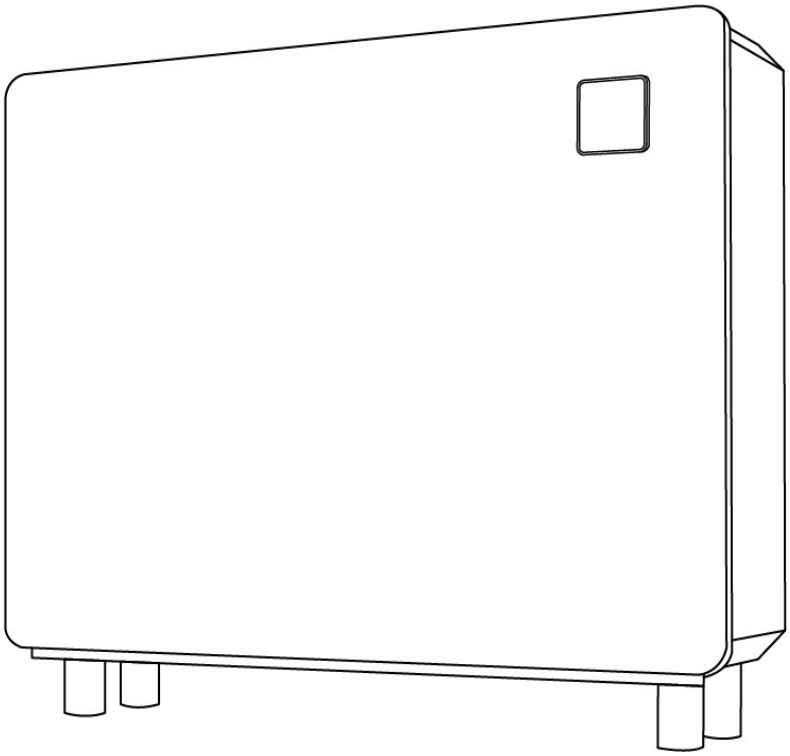

https://wszystkodobasenow.pl/osuszacz-powietrza-fairland-inverter-plus

SUMMARY

FOR USERS P.3-P.10

1. GENERAL INFORMATION 3

1.1. Name of Parts 3

1.2. Accessory list 4

1.3. Dimension 4

2. OPERATION 5

2.1. Instruction for Controller 5

3. TECHNICAL SPECIFICATION 10

FOR INSTALLERS AND PROFESSIONALS P.11-P.27

1. Installation and Maintenance 11

1.1. Notice before installation 11

1.2. Instruction 13

1.3. Trail after Installation 18

1.4. Daily Maintenance Notice 19

2. TROUBLE SHOTTING FOR COMMON FAULTS 19

3. FAILURE CODE 20

4. Wi-Fi Setting 21

Please read it carefully and keep it for subsequent use.

This manual provides you necessary information for optimal use and maintenance. This appliance is not intended for use by persons (including children) with reduced physical, sensory or mental capabilities, or lack of experience and knowledge, unless they have been given supervision or instruction concerning use of the appliance by a person responsible for their safety.



Warning:

a. Please read the following tips before installation, use and maintenance.
b. Installation, removal and maintenance must be carried out by Professionals in accordance with the instructions.
c. Gas leakage test must be done before and after installation.

1. Use

a. It must be installed or removed by professionals, and it is forbidden to dismantle and refit without permission.
b. Don't put obstacles before the air inlet and outlet of the dehumidifier.

2. Installation

a. This product must be kept away from any source of fire.

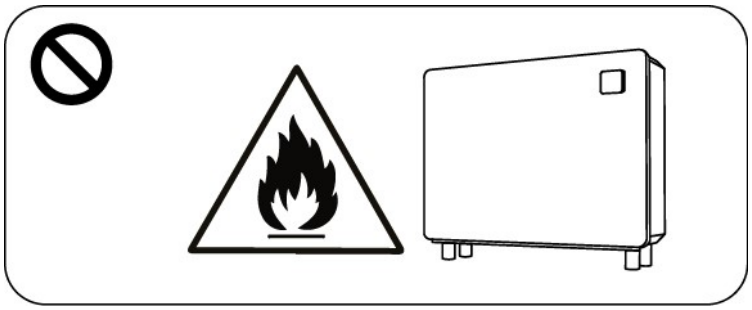

b. The installation place must be kept well ventilated.

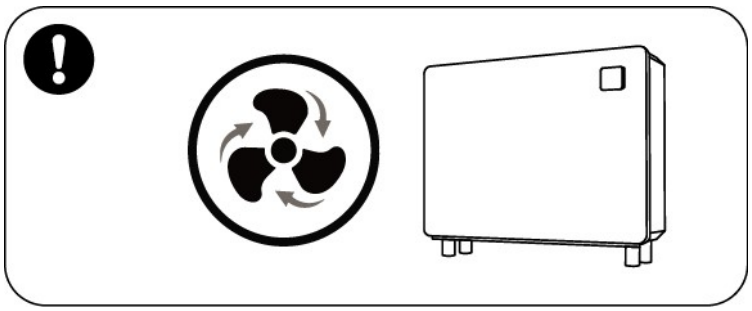

c. Vacuum completely before welding, field welding is not allowed, welding can only be performed by professional personnel in professional maintenance center.

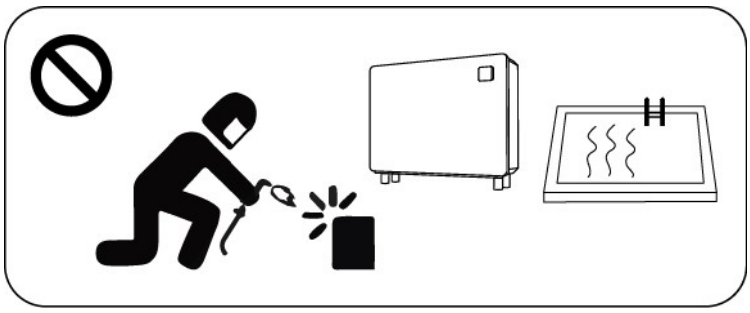

d. Installation must be stopped if any R32 gas leakage, and the unit must be returned to professional maintenance center.

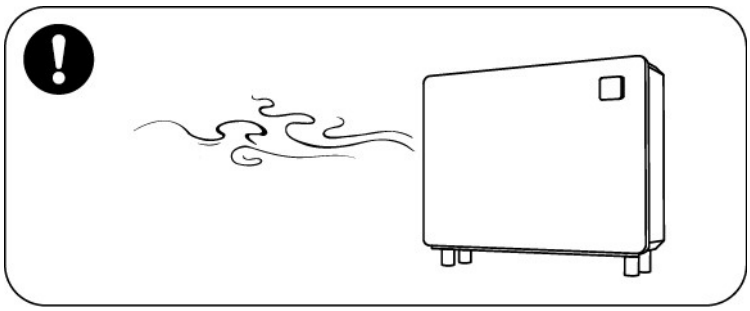

3. Transportation and Storage

a. Sealing is not allowed during transportation
b. Transporting goods at a constant speed is needed to avoid sudden acceleration or sudden braking, so as to reduce the collision of goods.
c. The unit must be far away from any source of fire.
d. Storage place must be bright, wide, open and good ventilation, ventilation equipment is required.

4. Maintenance Notice

a. If maintenance or scrap is required, contact an authorized service center nearby
b. Qualification requirement
   All operators who dispose refrigerant gas must be qualified by valid certification which issued by professional agency.
c. Please strictly comply with the requirement from manufacturer when maintenance or filling R32 refrigerant gas. Please refer to the technical service manual.

1. GENERAL INFORMATION

1.1. Name of Parts

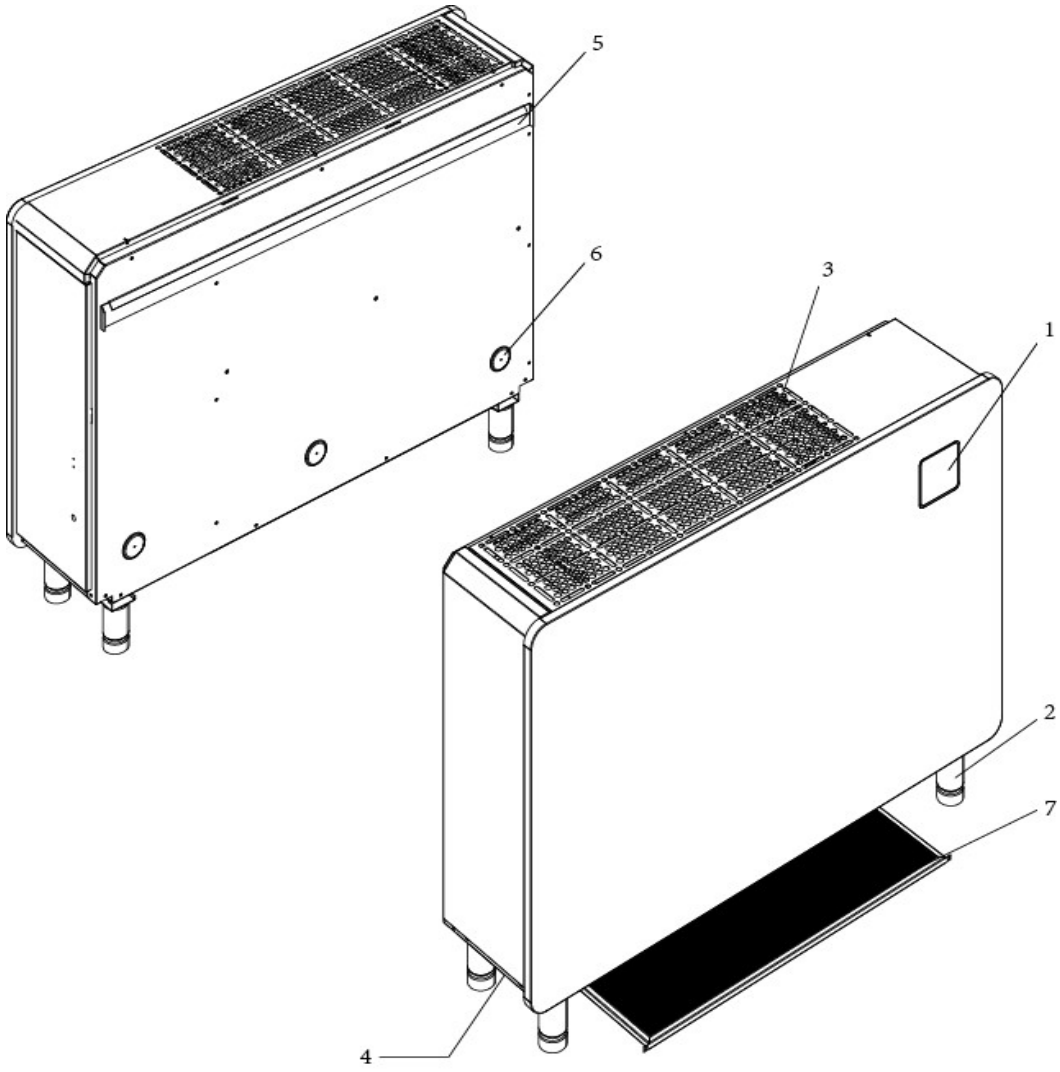

No.	Name
1	Controller
2	Feet
3	Air Outlet
4	Air Inlet (on the bottom)
5	Hanging Strip on Wall
6	Pad
7	Filter and filter bracket

1.2. Accessory list

Padx3，Feetx4，Drain-pipe x1(2m)，Hanging Stripx1，Manual

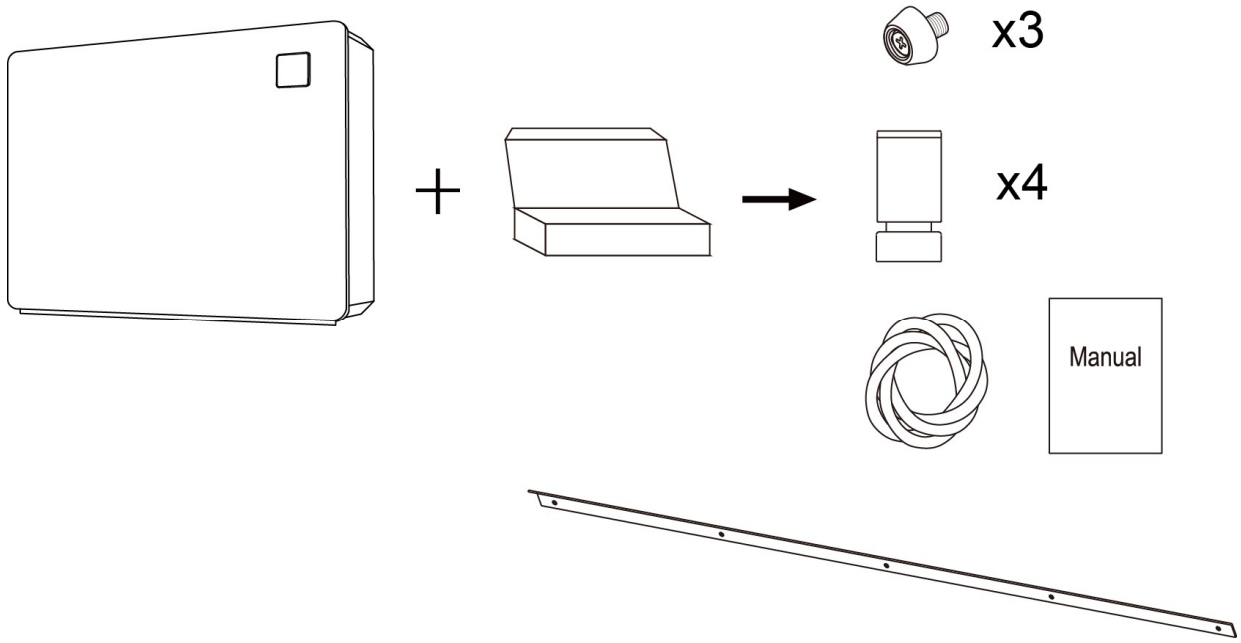

1.3. Dimension

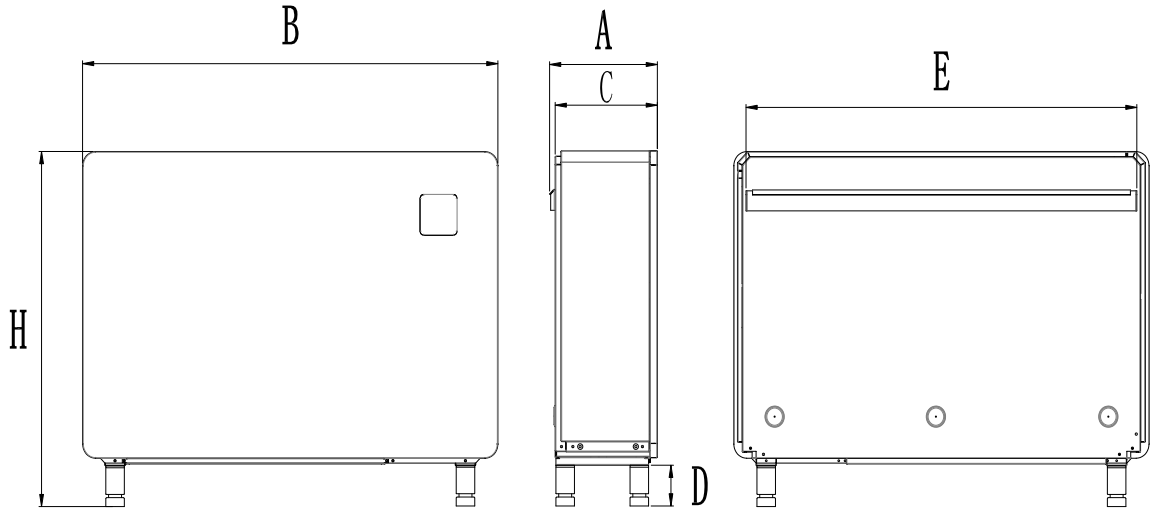

Size(mm) / Name / Model	A	B	C	D	E	H
IDHR60	291	850	276	100	784	870
IDHR96	291	1120	276	100	1054	870
IDHR120	291	1220	276	100	1154	870

2. OPERATION

2.1. Instruction for Controller



SYMBOL	DESIGNATION	FUNCTION
⏻	ON/OFF	Press to power on or off the dehumidifier
🔁	Mode	For dehumidifier with dehumidifying function only, press "🔁" to select Smart📶/Silence 📶mode.
🕘	Timer	Press to set the time to switch on and off
▲▼	Up and Down	Adjust the value of the required parameters

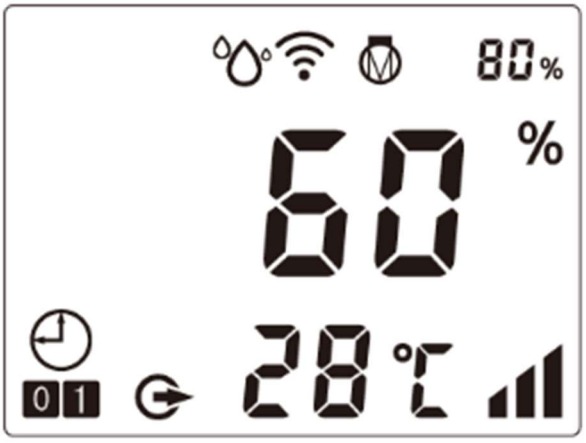

💧	Dehumidifying mode
Ⓜ80%	Compressor running percentage

	Wi-Fi connection
	Air temperature
	Humidity
	Mode
	Timer

1. When the dehumidifier it's on, press any button to light the keyboard and operate it. When it's off, press ⏻ to light the keyboard and operate it.
2. 🔁 Mode Button

   Dehumidifying Function only: Press 🔁 one time, it can transfer  or mode.

   Smart mode : Compressor running percentage between 100%～20%

   Silence mode : Compressor running percentage between 80%～20%
3. Humidity/Temperature Setting

(1) Dehumidifying Function only:

Press ▲or ▼ to set the humidity. The humidity setting range is 30-95%.

4. Timer Setting

(1) Timer ON setting: When the dehumidifier is on or off, press the "🕘" to enter the timer setting; Meanwhile, the symbol  light and the  are flashing to enter the Timer ON setting. Press the ▲ and ▼ to adjust Timer ON hour setting, then press 🕘, you can adjust the minute setting by pressing ▲ or ▼, then press the 🕘 for three times, the  will keep lighted, Timer on setting completely. (If you don't press ▲ or ▼ to adjust the time, timer setting will fail then withdraw automatically.)

(2) Timer OFF setting: When the dehumidifier is on or off, press the ⏲ to enter the timer setting; Meanwhile, the symbol 01 light and the 1 are flashing. Press ⏲ two times to enter the Timer OFF setting, the 0 is flashing, you can adjust the hour setting by pressing the ▲ and ▼, then press again the ⏲, then you can adjust the minute setting by pressing ▲ or ▼, and press the ⏲ , the 0 will keep lighted, the Timer off setting completed. (If you don't press ▲ or ▼ to adjust the time, time setting failed then withdrawal automatically.)

(3) Timer ON and OFF setting: When the dehumidifier is on or off, press the ⏲ to enter the timer setting; Meanwhile, the symbol 01 light and the 1 are flashing to enter the Timer ON setting. Press the ▲ and ▼ to adjust Timer ON hour setting, then press ⏲ , you can adjust the minute setting by pressing ▲ or ▼. Press the ⏲ to enter timer off setting, the 0 is flashing, you can adjust the hour setting by pressing the ▲ and ▼, then press again the ⏲, then you can adjust the minute setting by pressing ▲ or ▼, press ⏲ to confirm the status then exit, the 0 and 1 will keep lighted all the time.

(4) Method of cancelling timer function: Press the ⏲ to enter the timer setting. After Timer ON or Timer OFF setting, you can press directly the ⏲ without adjusting the setting time in order to cancel timing function setting.

(5) The timer is countdown setting and cannot repeat everyday. For example, when 12:30 is set and display for timer on, that means that the dehumidifier will automatically start after 12 hours and 30 minutes of countdown. If repeat is required, the timer need to be set again.

5. Wi-Fi setting

Please kindly check the last page.

6. Advanced application (for professional technician's operating only)

6.1. Running status checking

(1) Press ⏲ for 5 seconds to enter into "Running status checking", the screen alternately shows status point "C0" and its corresponding value.

(2) Check all status points and their corresponding value through ▲ and ▼, Press ⏲ to quit "running status checking" mode.

Table 1: Running status checking

Symbol	Content	Unit
C0	Inlet air temp	°C
C1	Outlet air temp	°C
C2	Relative humidity	°C
C3	Exhaust temp	°C
C4	Evaporation coil temp	°C
C5	Gas return temp	°C
C6	Cooling plate temp	°C
C9	DC fan speed	r/min

6.2. Parameter Checking

(1) Press ⏲ and ▲ for 5 seconds to enter into "Parameter Checking" status, the parameter code "P0" and the parameter value "0" or "1" will display on the screen, such as "P0 0" or "P0 1".

(2) In "Parameter checking" status, press ▲ or ▼ to check the parameters.

6.3. Parameter modification

In "Parameter checking" status, press ⏲ to enter the "parameter modification" mode, press ▲ or ▼ to change the values, then press ⏲ to confirm and quit "parameter modification" mode. press ⏻ to quit "Parameter Checking" status.

6.4. Parameter list

NO.	Content	Adjust range	Step length
P0	Heating function	0 — no / 1 — yes	1
P1	Fan running mode	0: Reach temp/humidity to low speed 1: Reach temp/humidity stop	1
P2	Compressor continuously running time before defrosting mode	20 ~ 90min	1min
P3	Defrosting start temp	-10 ~ 10°C	1°C
P4	Defrosting running time	1 ~ 12min	1min
P5	Defrosting quit temp	0 ~ 30°C	1°C
P6	Humidity compensation	-5% ~ 5%	1%
P10	Compressor speed control	0: Auto 1: Manual	1
P11	Compressor speed setting	15 ~ 110Hz	1Hz
P12	Electronic expansion valve overheat level	-10 ~ 20°C	1
P13	Electronic expansion valve manual/auto	0: Auto 1: Manual	1
P14	Electronic expansion valve openning setting	50 ~ 240	2 P
P15	Power off memory function	0 — no / 1 — yes	1

3. TECHNICAL SPECIFICATION

Model	IDHR60	IDHR96	IDHR120
Advised pool surface (㎡) *	≤25	≤40	≤50
Advised room size (㎡) *	60~120	90~180	120~240
Operating air temperature (°C)	10~38		
Capacity (l/h) (Air 30°C，RH 80%) *	2.5	4.0	5.0
DER (l/h.kW) (Air 30°C，RH 80%) *	4.00~3.40	4.53~4.05	4.50~3.68
Capacity (l/h) (Air 30°C，RH 70%) *	2.1	3.3	4.2
DER (l/h.kW) (Air 30°C，RH 70%) *	3.34~3.00	4.00~3.50	3.86~3.25
Electric heating optional (kW)	1.3	2.1	2.1
Rated power (kW) (Air 30°C，RH 80%) *	0.11~0.73	0.17~0.99	0.22~1.36
Rated current (A) (Air 30°C，RH 80%) *	0.48~3.17	0.74~4.30	0.96~5.91
Power supply	230V/1Ph/50Hz		
Sound pressure at 1 m dB(A)	38.3~45.6	40.3~45.8	39.9~46.4
Air flow (m^3/h)	600	1000	1200
Net dimension (mm)	850×291×770	1120×291×770	1220×291×770
Net weight	53	68	72

1. The temperature of this products can only work normally within the range of 10 °C ~ 38 °C. If it exceeds this range, the performance will not be guaranteed; please note that the performance parameters of the dehumidifier will be different under different working conditions;
2. Due to the technical improvement of the product, the relevant parameters will be adjusted by steps without prior notice. Please refer to their nameplate for more details.

1. Installation and Maintenance

⚠This product must be installed by a professional team. The users are not qualified to install by themselves, otherwise the dehumidifier might be damaged and risky for users' safety.

1.1. Notice before installation

The product is only used for dehumidification of the swimming pool and must ensure sufficient air circulation, otherwise the dehumidification function will be ineffective or have little effect.

1.1.1. When storing or moving the equipment, it should be at the upright position

1.1.2. The equipment is a general dehumidification product, NEVER use it for other flammable and turbid gases.

1.1.3. Set the temperature and humidity appropriately to get a comfortable environment.

1.1.4. Do not place objects that block the airflow nearby the air inlet or the air outlet, because it will reduce the effect of the equipment and even stop the equipment.

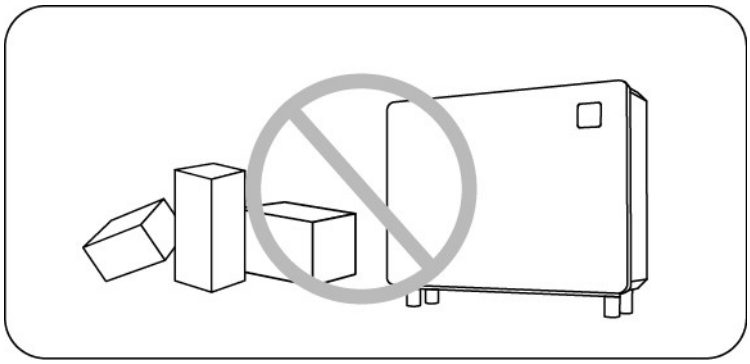

1.1.5. Do not put the hands or other objects such as sticks into the air inlet and outlet of the dehumidifier, and do not remove its appearance. Otherwise, the high speed running wind wheel may cause injury to you.

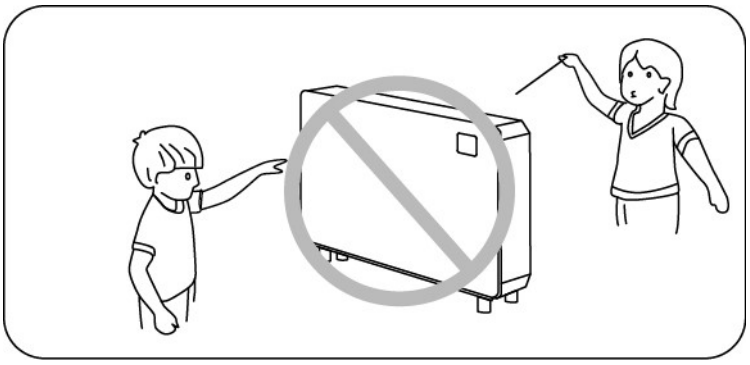

1.1.6. It is strictly forbidden to use or store flammable gases or liquids such as hair spray, paint, gasoline, etc. near the dehumidifier, otherwise a fire may occur.

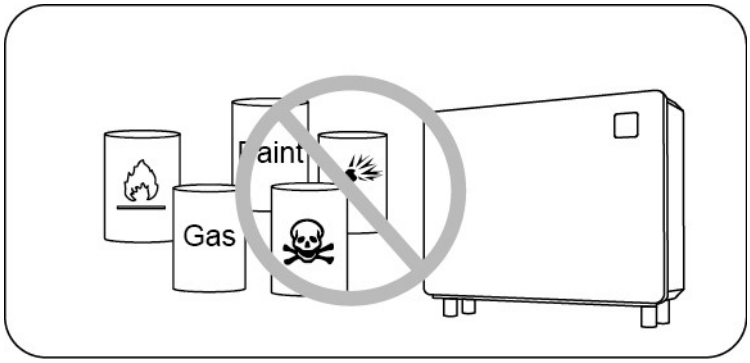

1.1.7. If any abnormal conditions such as abnormal noise, odour, smoke, leakage, etc., are found, the power should be cut off immediately and contact the local dealer, and do not repair the equipment yourself.

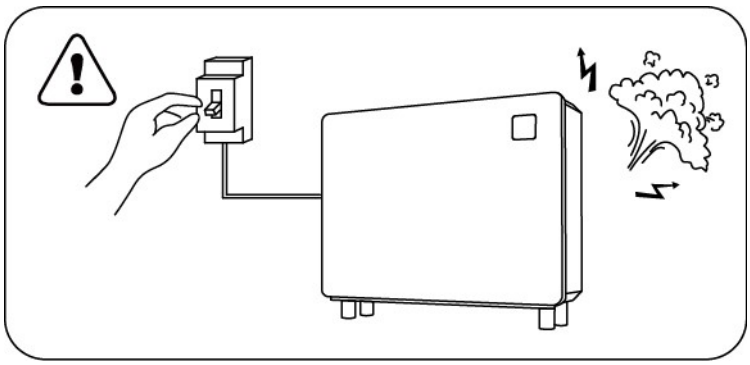

1.1.8. The manpower switch should be located in a position that the child cannot reach, to prevent children from playing with the main power switch in danger.

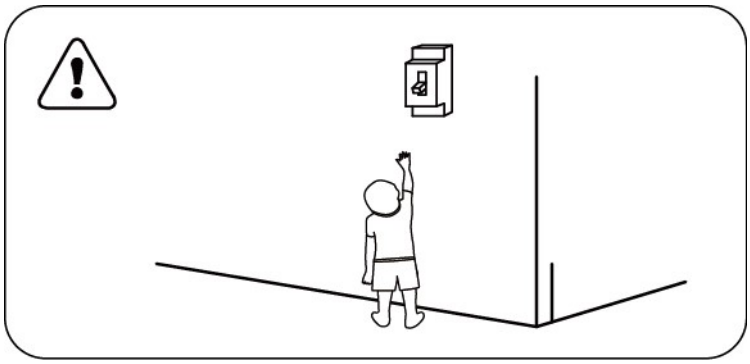

1.1.9. In thunderstorms, disconnect the main power switch, otherwise the lightening might damage the unit

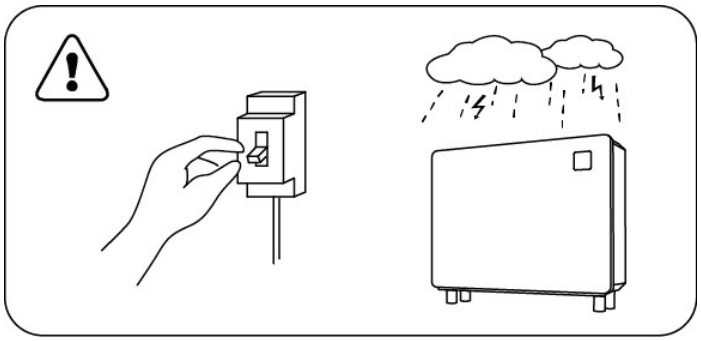

1.1.10. Do not wash the equipment directly with water.

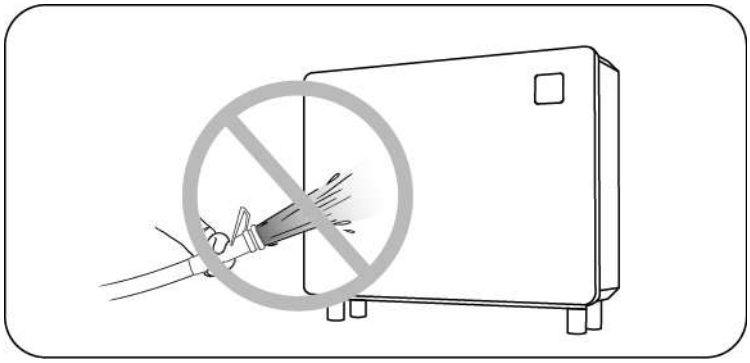

1.2. Instruction

This product should be installed in a well-ventilated place

Ambient - Floor Standing

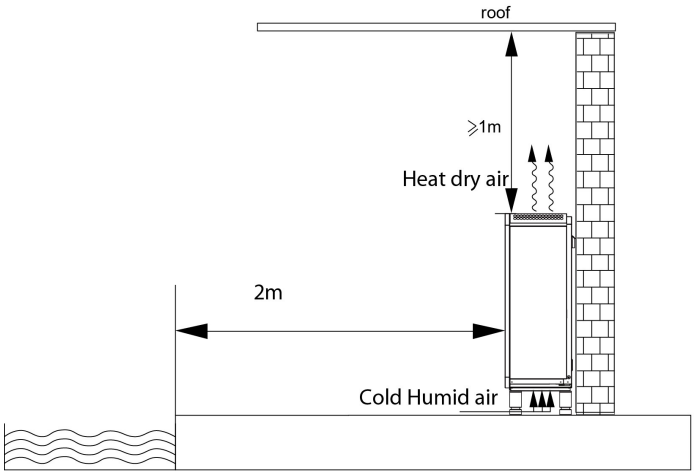

Ambient_Wall Mounted

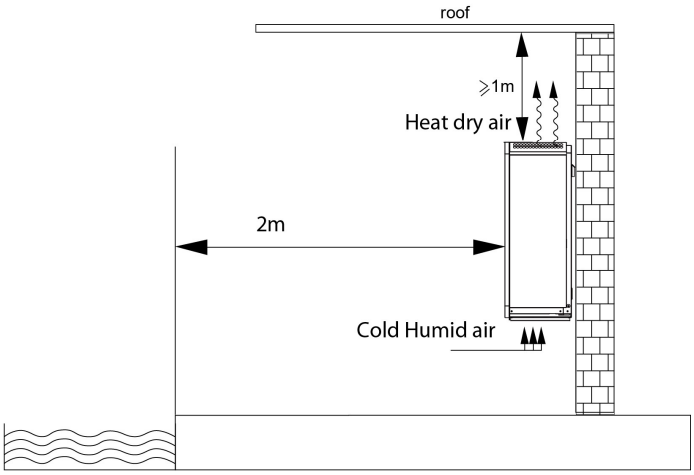

1.2.1. Installation

(1) The dehumidifier may be placed on the ground or installed on the wall;

(2) When installing on the wall, be sure to use M6 pull-out screws to fix the bracket, the concrete foundation of the selected wall should be firm and strong, and the bracket should be strong enough and rust-proof;

(3) Please ensure that the dehumidifier and the swimming pool are kept at a distance of 200cm or more. Do not place objects which block the airflow near the air inlet or air outlet. Do not set any obstacles within 100cm in front of the air outlet. Otherwise, the efficiency of dehumidification will be reduced, or even the system will stop running.

(4) When the dehumidifier is running, there will be condensed water discharged from

the bottom board, please pay attention; put the drainage kit firmly into the drain hole of the bottom board, and then connect the drain pipe to drain away the condensed water smoothly.

Steps to install the foot and place it on the ground:

1. Align the foot to the mounting hole of the dehumidifier chassis and screw it in the clockwise direction (do not flip the equipment to install!).

A: Power Cord; B: Drain Outlet (Connected with drain pipes)

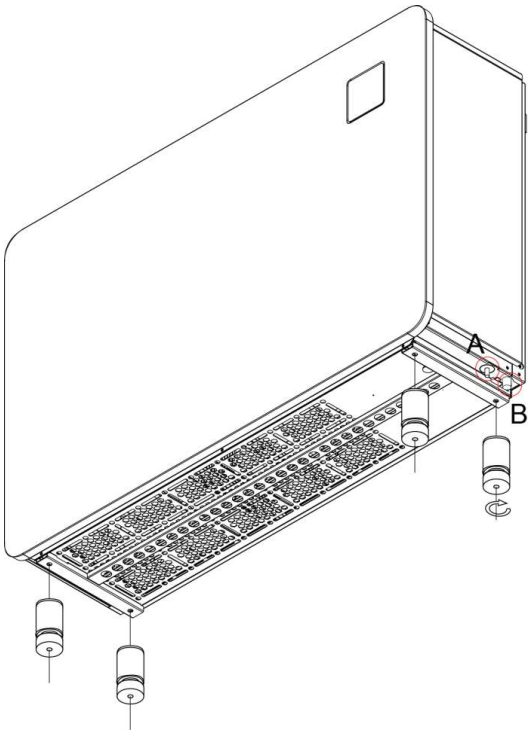

2. **Connect the drain pipe and connect the power cord according to the cable diagram.**

Steps of installation on the wall:

1. On the appropriate wall, mount the bracket to the wall by attaching five φ6mm pull-out screws to the holes in the wall bracket.

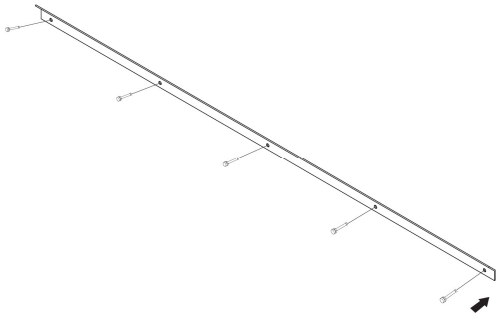

2. Place the pad on the wall-mounting platform behind the equipment

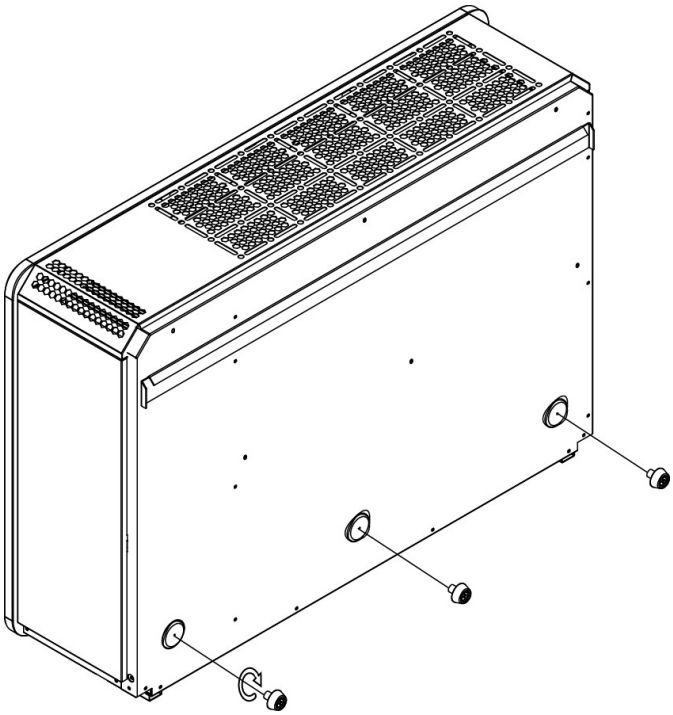

3. Hang the hanging strip on the back of the equipment on the bracket.

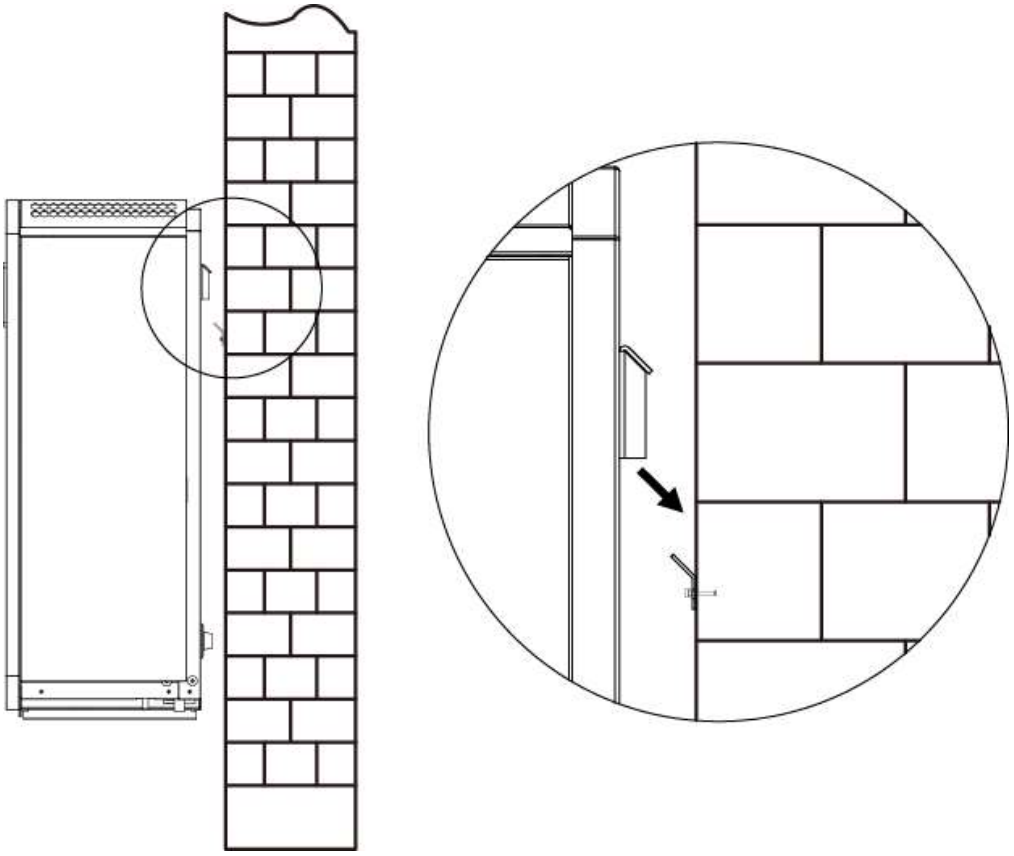

After hanging the bracket, gently put the equipment until the pad of the bottom rests against the wall.

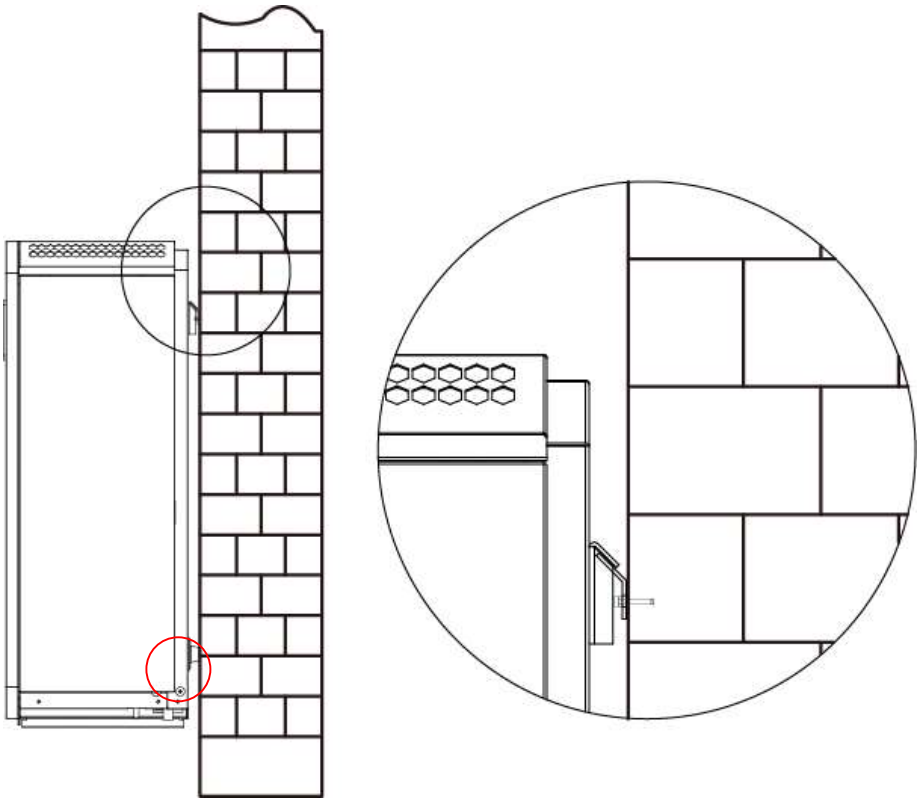

4. Connect the drain pipe, and connect the power cord according to the wiring diagram

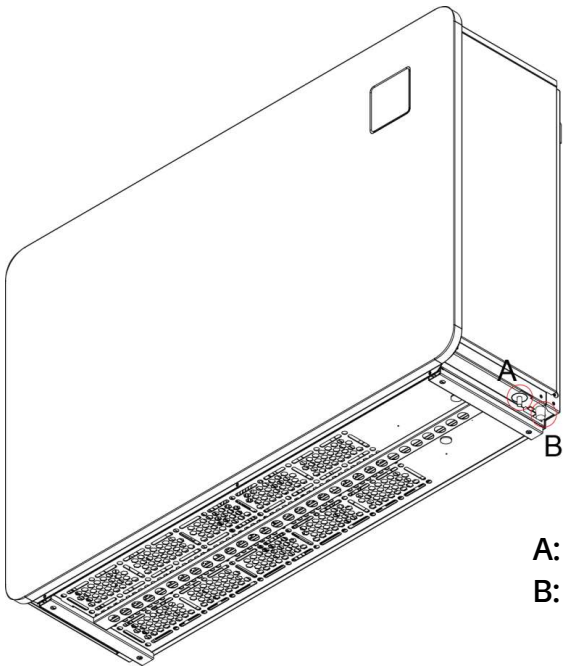

A: Power cord;
B: Drain outlet (connect the drain pipes)

1.2.2. Electrical installation wiring

(1) Connect to appropriate power supply, the voltage should comply with the rated voltage of the products.

(2) Dehumidifier must be well grounded.

(3) Wiring must be connected by professional technician according to the circuit diagram.

(4) According to the requirements of relevant electrical equipment technical standards of the local country of the user, set up leakage protection devices (leakage operating current ≤30mA)

(5) The layout of power cable and signal cable should be orderly and not affecting each other; considering the environmental condition (ambient temperature, direct sunlight, rain, power grid voltage, cable length etc.)

(6) The cross-sectional area of the cable can be appropriately increased.

(7) Completed all the wiring, must be checked carefully then connect the power.

Electric wiring diagram

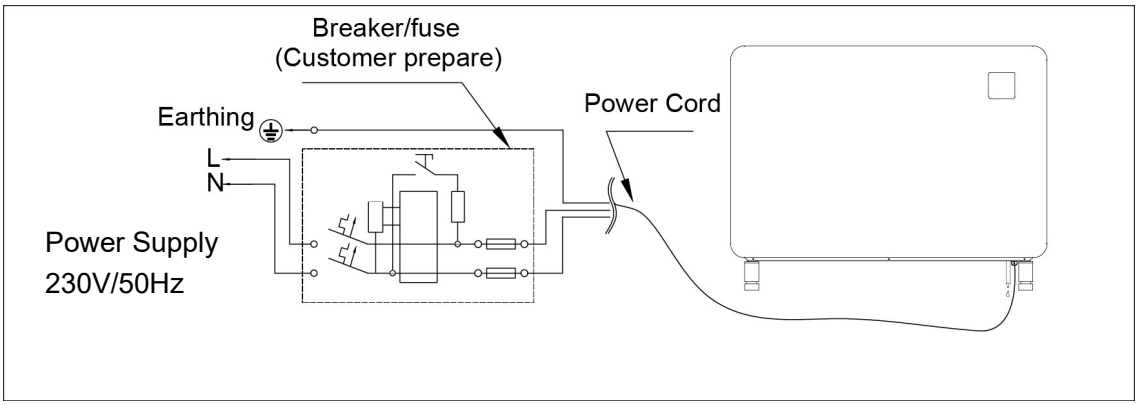

Model		IDHR60	IDHR96	IDHR120
Breaker	Rated current (A)	8.0	10.0	12.0
	Rated residual Action Current (mA)	30	30	30
Max input current (A)		6.5	8.0	9.5
Fuse (A)		8.0	10.0	12.0
Power cord (mm^2)		3x1.5	3x2.5	3x2.5

Note: Above date is adapted to power cord ≤10m.If power cord ≥10m, wire diameter must be increased.

1.3. Trail after Installation

Please check all the wirings carefully before turning on the dehumidifier.

1.3.1. Inspection before use

(1) Check if the dehumidifier is vertically or horizontally placed on the ground or hung on the wall, connected with drain pipe;

(2) Check the electric wiring according to the electrical wiring diagram and earthing connection;

(3) Make sure that the main power is well connected;

(4) Make sure that setting the appropriate humidity;

(5) Check if there is any obstacle in front of the air inlet and outlet of the dehumidifier.

1.3.2. Trail

The user should open the power switch firstly then connect the power.

To protect the dehumidifier, it is equipped with start delay function; when starting the dehumidifier, the fan will firstly start to run in 3 minutes, then the compressor will start running.

After dehumidifier starts up, check for any abnormal noise from the dehumidifier.

1.4. Daily Maintenance Notice

⚠The maintenance should be carried out per year by qualified professional technician.

Cut off power supply of the dehumidifier before inspection;

Please cut off the power supply when not be used, and cover the plastic sheet use the cloth to prevent dust from entering.

Please clean the dehumidifier with the household detergents or clean water, NEVER use Volatile oil, gasoline, thinner or sassafras powder.

2. TROUBLE SHOTTING FOR COMMON FAULTS

Failure	Reason	Solution
Dehumidifier doesn't run	No power	Wait until the power recovers
	Power switch is off	Switch on the power
	Fuse burned	Check and change the fuse
	The breaker is off	Check and turn on the breaker
Fan running but insufficient heating	Evaporator blocked	Remove the obstacles
	Air outlet blocked	Remove the obstacles
	3 minutes start delay	Wait patiently
Display normal, but no dehumidification	The set humidity too low	set proper humidity
	3 minutes start delay	Wait patiently
If above solutions don't work, please contact professional installer with model number and detailed information. Don't try to repair it yourself.		

ATTENTION! Please don't try to repair the dehumidifier by yourself to avoid any risk.

3. FAILURE CODE

NO	Failure	Code
1	High pressure protection	E1
2	Low pressure protection	E2
3	Abnormal power supply voltage protection	E5
4	Electric heating overheating protection (manual reset thermostat)	E7
5	Exhaust high temp protection	E8
6	Air out high temp protection	EA
7	Environmental low temp protection	Eb
8	Controller failure	P0
9	Air inlet temperature sensor failure	P1
10	Air outlet temperature sensor failure	P2
11	Exhaust gas temp sensor failure	P3
12	Gas return temp sensor failure	P5
13	Evaporation coil temperature sensor failure	P6
14	Ambient humidity sensor failure	P7
15	Cooling plate sensor failure	P8
16	Current sensor failure	P9
17	Restart memory failure	PA
18	Compressor drive module or related wiring failure	F1
19	PFC module failure	F2
20	Compressor start failure	F3
21	Compressor running failure	F4
22	Inverter board over current protection	F5
23	Inverter board overheat protection	F6
24	Over current protection	F7
25	Radiator high temperature protection	F8
26	DC fan fault	F9
27	PFC module overcurrent protection	FA

4. Wi-Fi Setting

4.1. APP Download

Android Mobile please download from

ANDROID APP ON
Google play

iPhone please download from

Available on the
App Store

4.2. Account registration

a) Registration by Cell phone number/Email

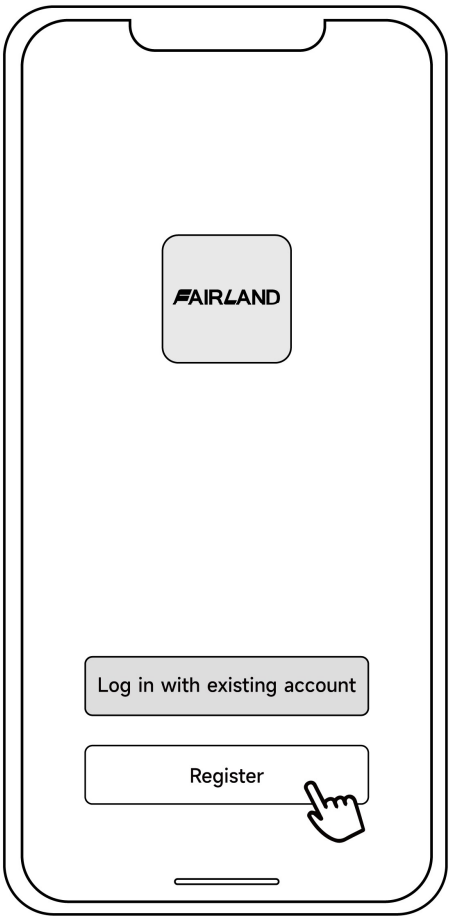

b) Cell phone number registration



4.3. Create family

Please set a name for the family and choose the room of the device.

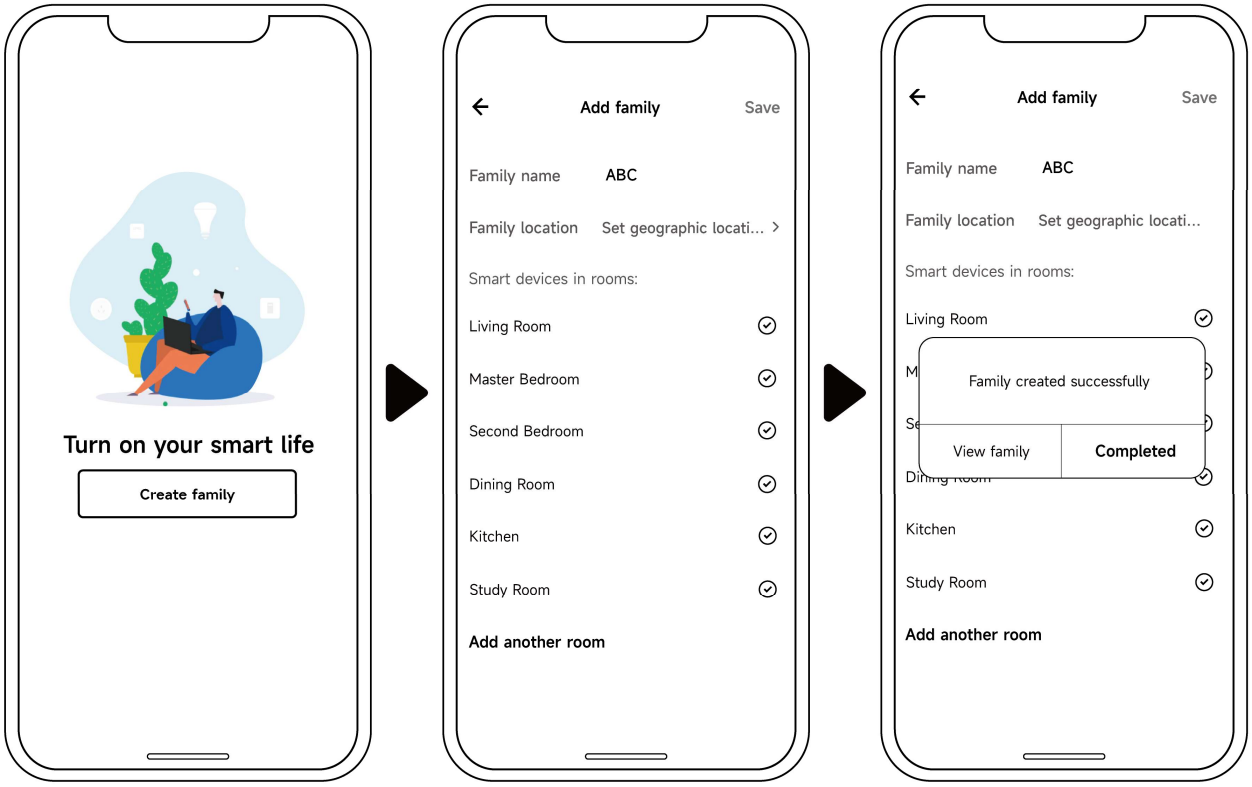

4.4. Three methods of device binding

Please connect your phone to the Wi-Fi network first.



4.4.1. Auto Discovery (Bluetooth)

a) Please make sure the Bluetooth function is enabled on your phone.

b) When switched on, tap any key to wake up the controller, then press ⏻ for 3 seconds, and 📶 will be flashing rapidly to enter Wi-Fi binding status.

c) Click "Add Device", wait for the app to search for the device and then click “add”, then follow the instructions below to finish the device binding.



Note:

1. It will take some time to scan, please be patient.
2. Only Wi-Fi modules with Bluetooth functions can use this method.

4.4.2. EZ Mode (Easy-connect)

a) Activate the Wi-Fi module

b) When switched on, tap any key to wake up the controller, then press ⏻ for 3 seconds, and 📶 will be flashing rapidly to enter Wi-Fi binding status.

c) Click "Add device", and follow the instructions below to finish binding. 📶 display on the screen once the Wi-Fi connection success.



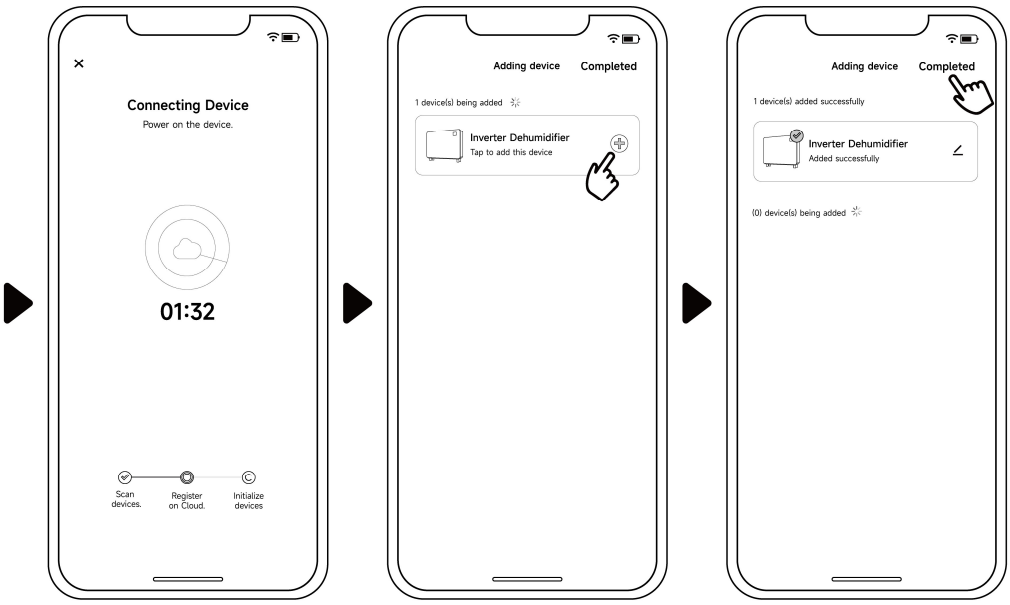

Note:

1. After allowing the APP to locate, it can read the Wi-Fi name automatically.
2. Before clicking "Completed", you need to click "+" once.

4.4.3. AP Mode

Activate Wi-Fi module

a) When switched on, tap any key to wake up the controller, then press ⏻ for 10 seconds, and 📶 will be flashing slowly to enter Wi-Fi binding status.

b) Click "Add device", and follow the instructions below to finish binding. 📶 display on the screen once the Wi-Fi connection success.

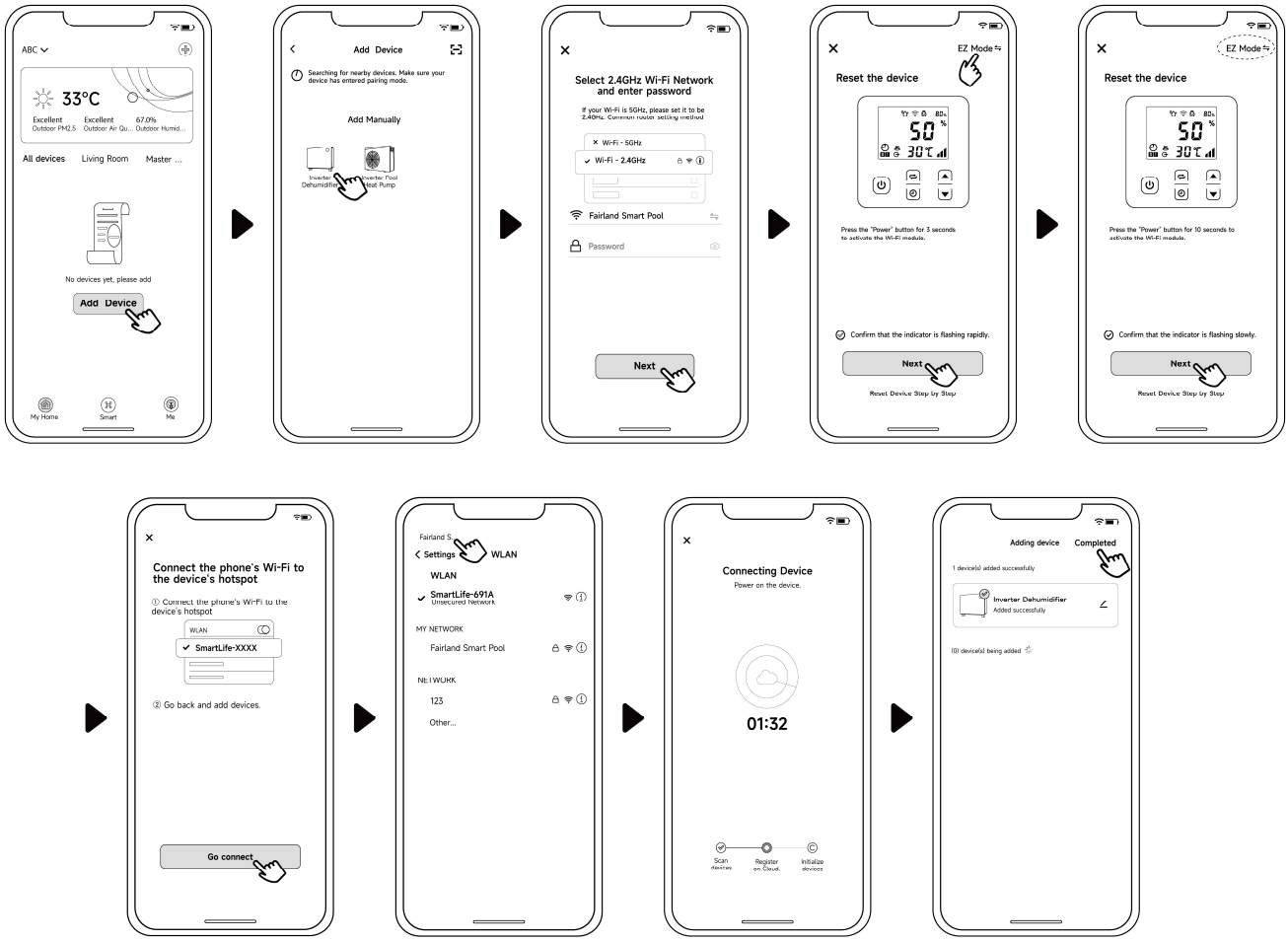

Note: If it doesn't jump automatically, click "Confirm hotspot connection, next".

4.4.4. If connect fails, please make sure your network name and password are correct. And your router, mobile phone and device are as close as possible.

4.4.5. Wi-Fi rebinding (When Wi-Fi password changes or network configuration changes)

Press ⏻ for 10 seconds, 📶 will be flashing slowly for 60 seconds. Then 📶 will be off. The original binding will be removed. Follow steps above for rebinding.

Remarks: Please make sure the router is configured at 2.4 GHz.

4.5. Operation instructions

The following instructions are for dehumidifiers without an electrical heater.

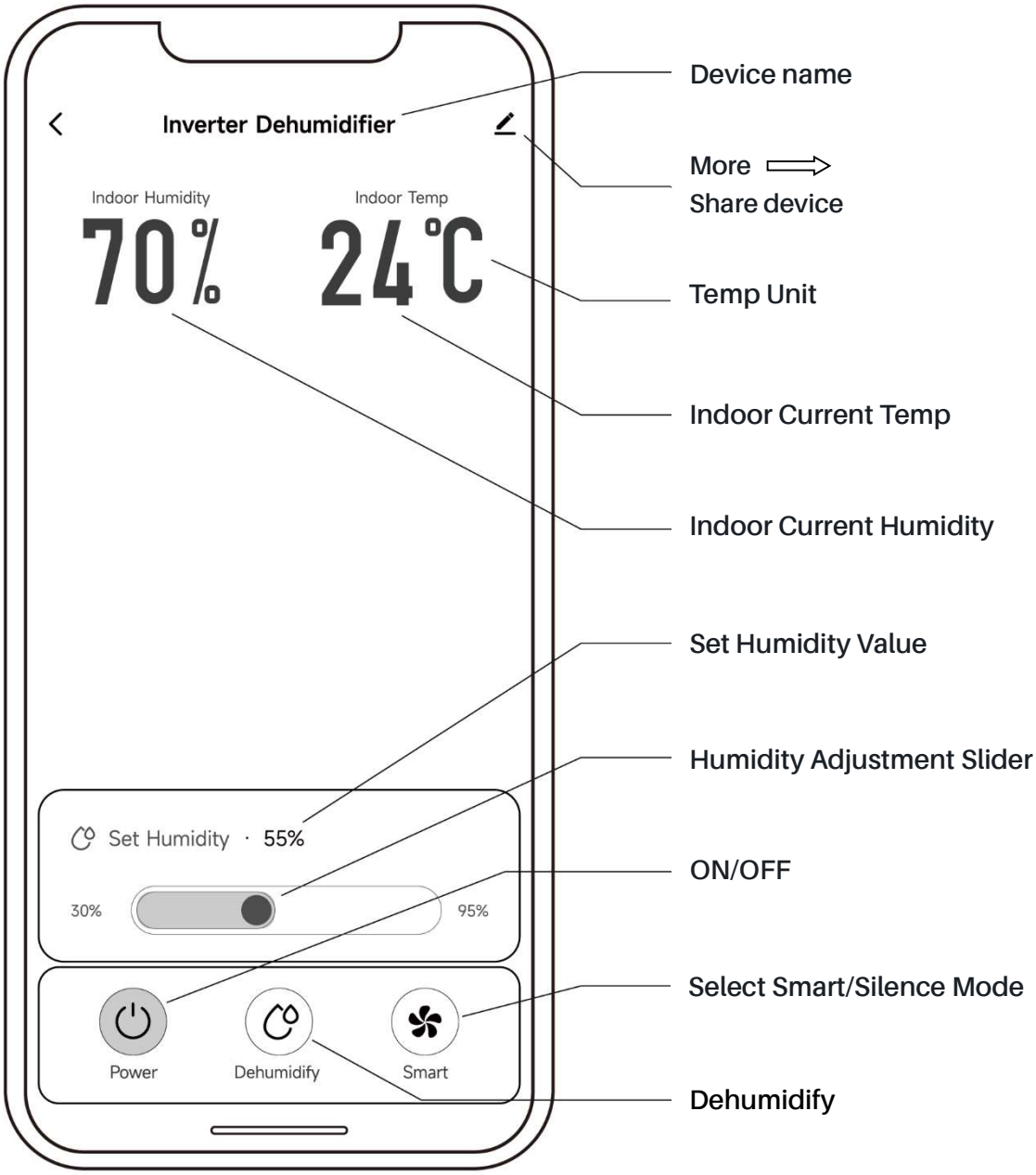

4.6. Share devices with your family members

After binding, if your family members also want to control the device.
Please let your family members register the APP first, and then the administrator can operate as below (The following pictures are for reference only):

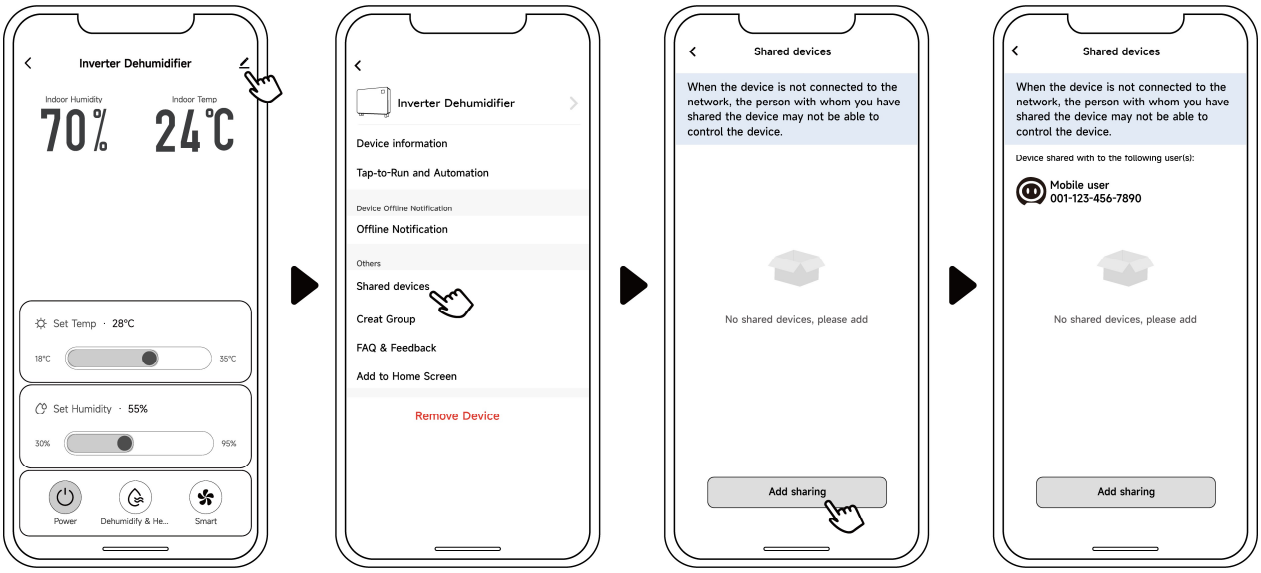

Then your family members will see this heat pump once they log in to the APP.

Notice:

1. The weather forecast is just for reference.
2. APP is subject to update without notice